Conor Rinora Portable Bidet Spray

Manual

Model

CR-RPB

Thanks for choosing our product

And please read the instructions carefully before using.

The pictures are for reference only, please refer to the actual product



Contents

Before use

Important safety instructions 3

Parts list 4

Operation

Product overview 5

How to charge & store 7

Appendix

Specifications 8

Safety precautions 8

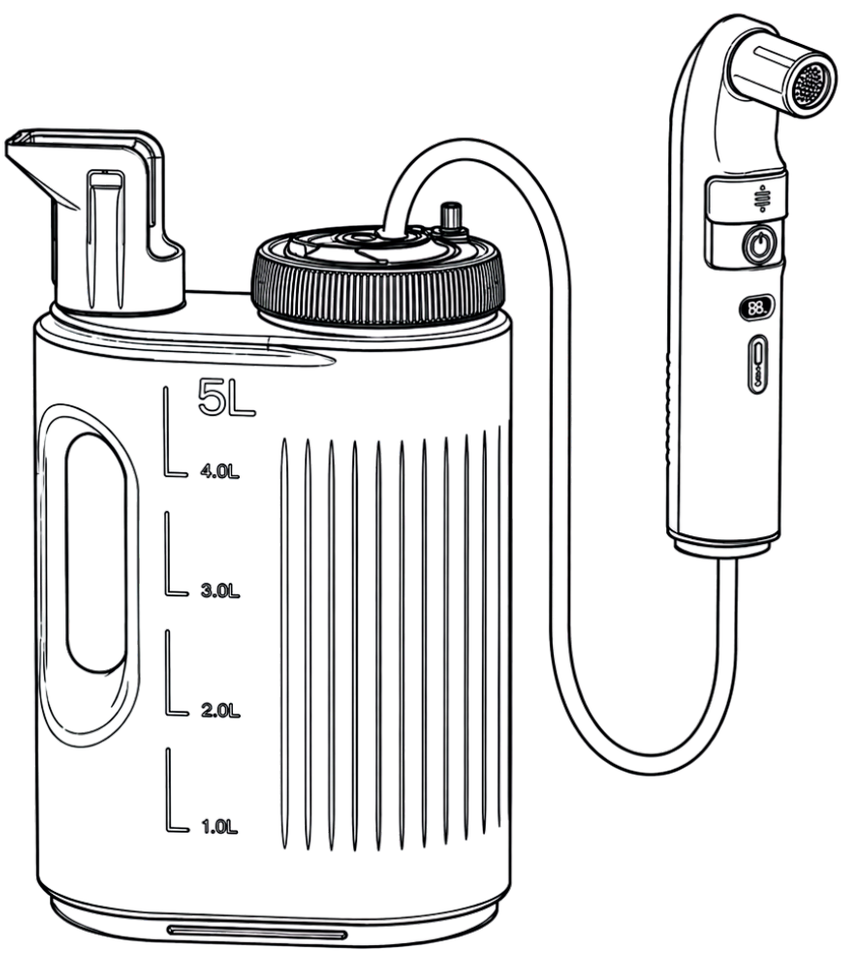

Safety precautions

IMPORTANT SAFETY INSTRUCTIONS

1. PLEASE READ ALL INSTRUCTIONS BEFORE USING THE APPLIANCE.
2. KNOW HOW TO STOP THE PRODUCT AND CHARGE THE BATTERY.
3. FOLLOW THE MAINTENANCE INSTRUCTIONS SPECIFIED IN THE MANUAL.
4. OPERATE ONLY WITH WATER WITHIN THE TEMPERATURE RANGE 10°C to 50°C.
5. BIDET ASSEMBLY INCLUDES SMALL PARTS THAT COULD BE A CHOKING HAZARD.

WARNING

TO REDUCE THE RISK OF INJURY:

1. Do not leave appliance unattended when in use. Switch the power off when not in use.
2. Use only as described in this manual with manufacturer's recommended attachments and replacement parts.
3. Do not use the bidet with water from the sea, or muddy/dirty condition water.
4. Make sure charger port is closed tight and do not put the device into water to avoid damage.
5. When operated by children, proper instruction and attention should be given.
6. Recharge the battery using specification required. Output: 5V / 0.5–1A.
7. Do not use damaged power cord or plug. Charge only with correct voltage as listed on the rating plate. Improper voltage may damage the battery and cause injury.
8. Before use, ensure no broken or worn parts and all screws are fully tightened.
9. Keep the device away from heating or fire.
10. Keep the device away from freezing. Freezing will damage the motor and cord.
11. Do not disassemble your device. This will void all warranties.
12. Do not charge the battery overnight or overcharge.

Technical Manual Version

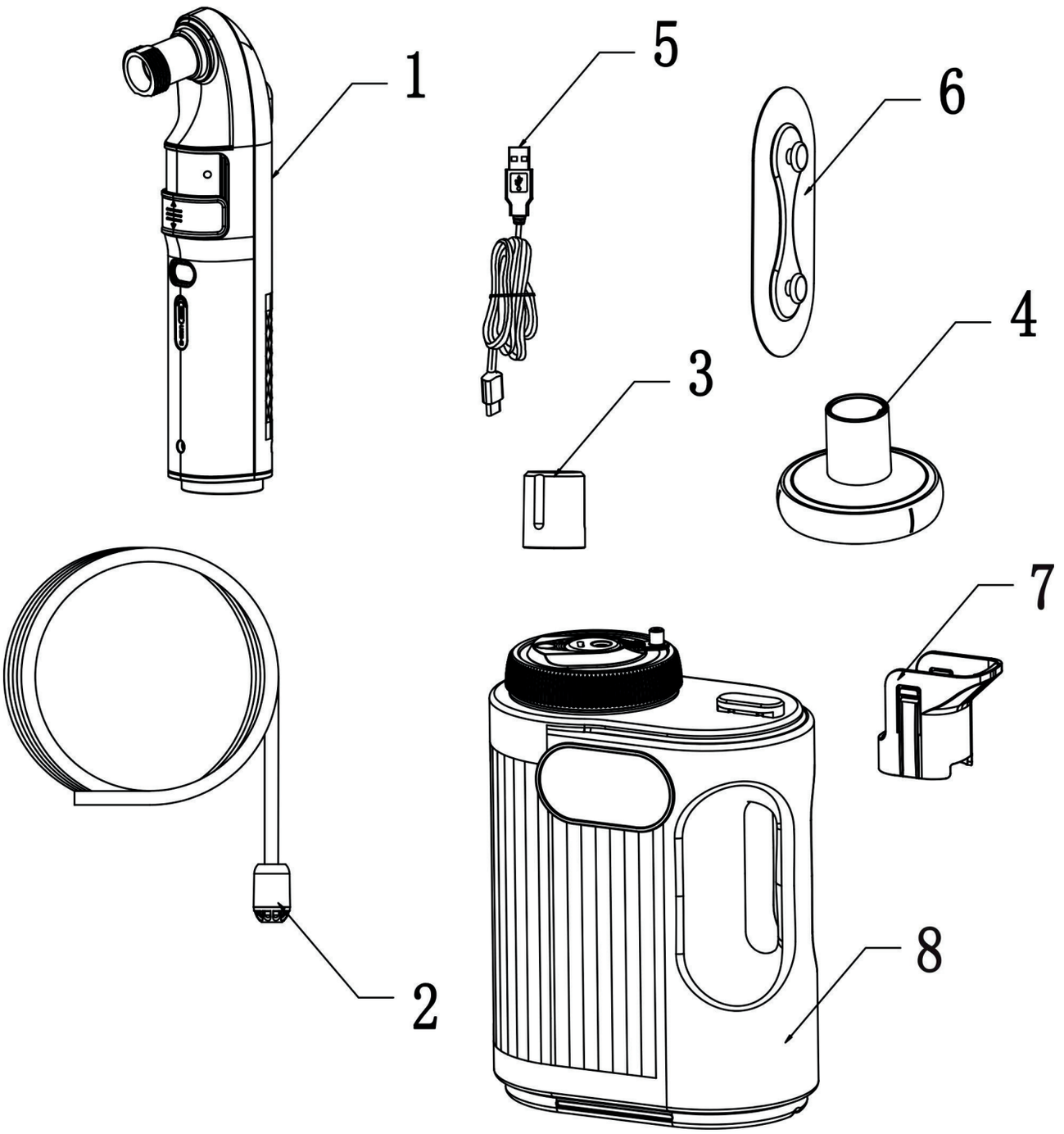

1. Device

2. Filter head

3. Bidet Nozzle

4. Shower Head

5. USB Charging Cable

6. Adhesive-Backed Hanging Hook

7. Holder

8. 5L tank

Product Overview

◆ 1. Attach Accessory

Twist the Bidet Nozzle or Shower Head onto the device to attach.

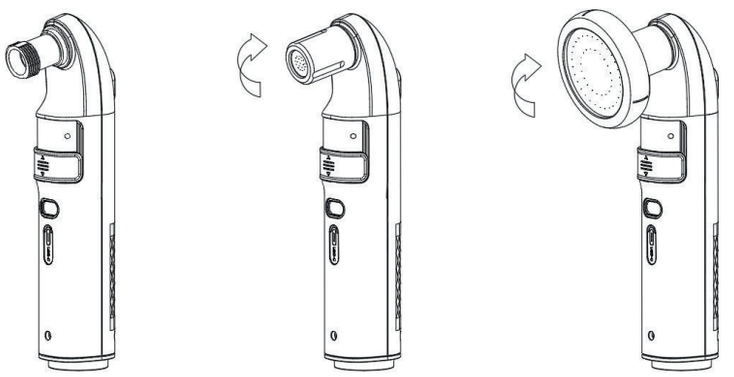

◆ 2. Open Protective Cover & Operate

Slide to open the protective cover for operation. After use, close the cover for storage.
The button features two adjustable settings, the current mode is shown in the display screen.

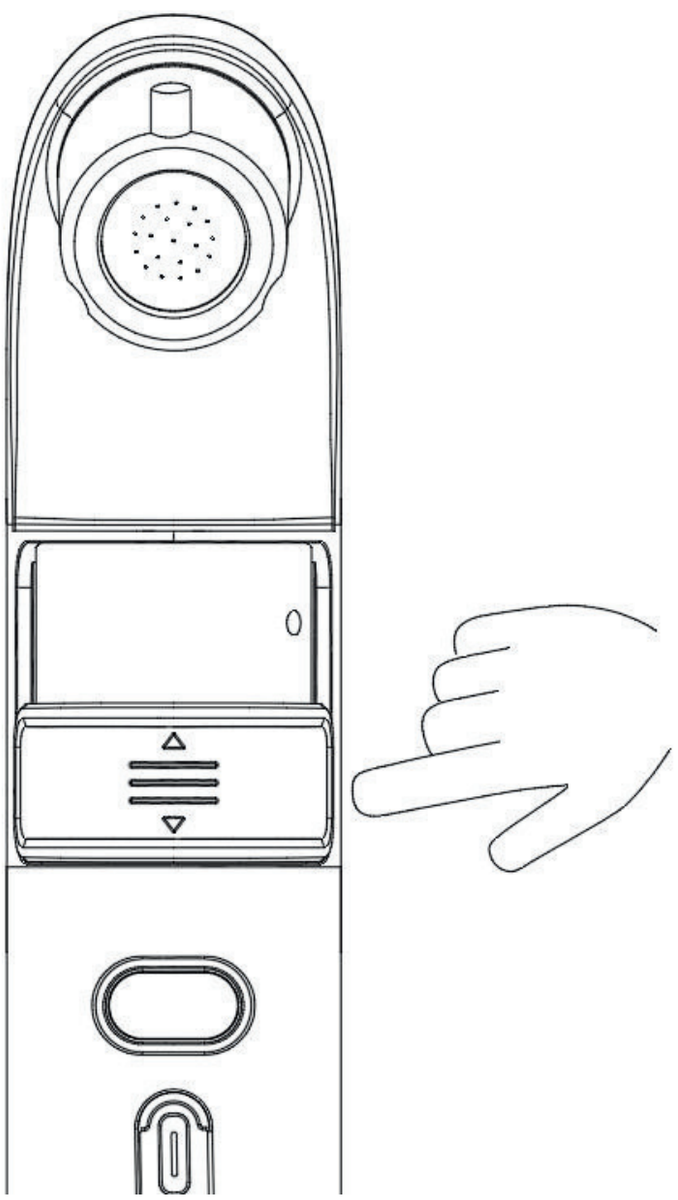

Product Overview

◆ 3. Water Inlet Methods

This product supports two water inlet methods:

Method ① : Hose & Water Tank

① The pillar on the base cover connects to one end of the hose. Place the other end (with the filter) into the water source. This allows vertical use of the device.
Open the soft rubber lid on the water tank, fill with clean water, then put the hose into the bottom of the water storage tank.

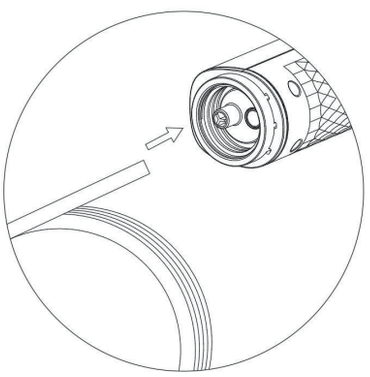

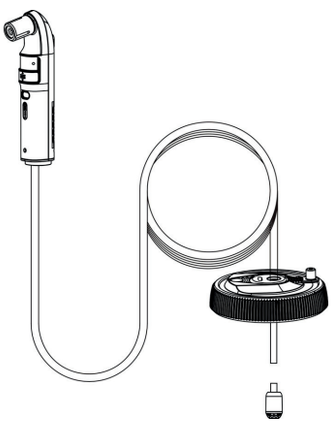

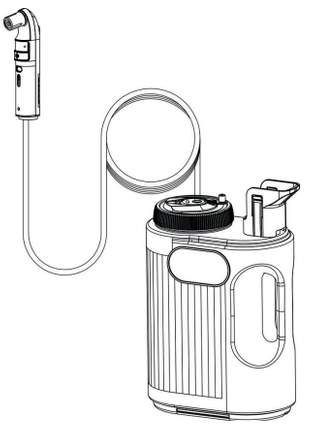

Method ② : Water Bottle Attachment

② The threaded base allows attachment of compatible water bottles. First, fill the bottle with clean water. Then screw the bottle firmly onto the main unit until securely fastened.

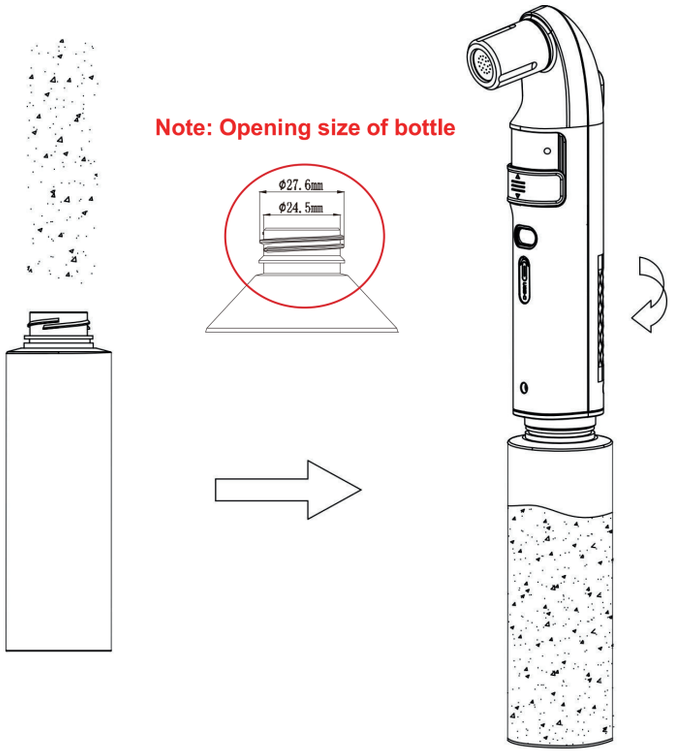

Using the device inverted for Cleaning

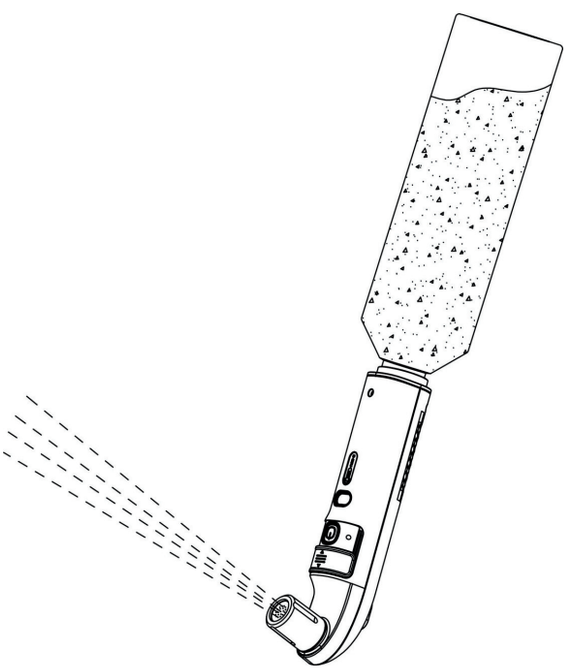

How to Charge & Store

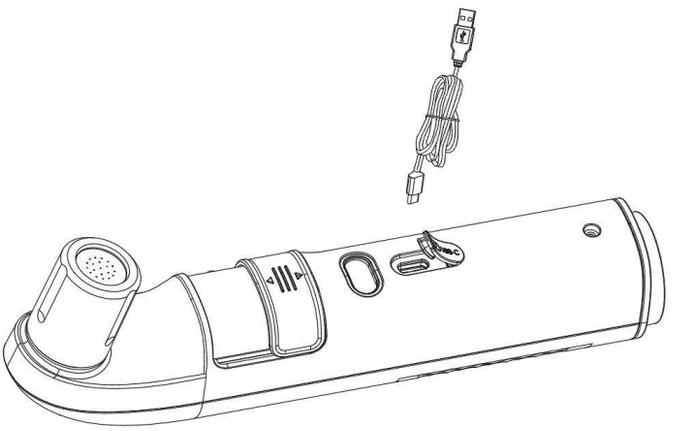

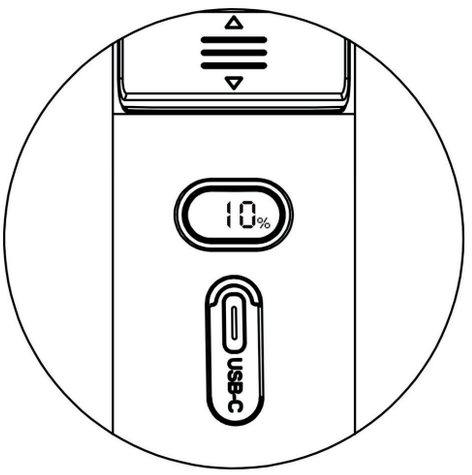

Open the socket cover, plug the USB cable to charge it when it is in low power. Connect the USB charging cable to:

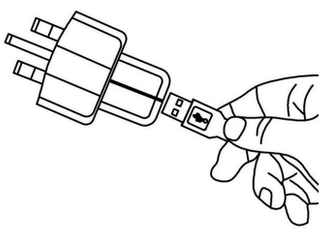

A 5V Phone USB charger

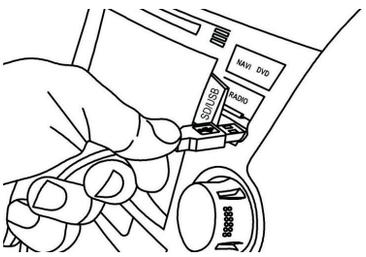

A Car USB socket

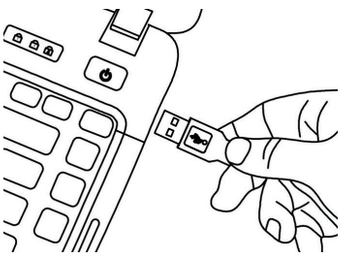

AComputer USB socket

WARNING! Do not use the charger with output higher than 5V to charge the device, it may damage the battery and cause fire & explosion!



①

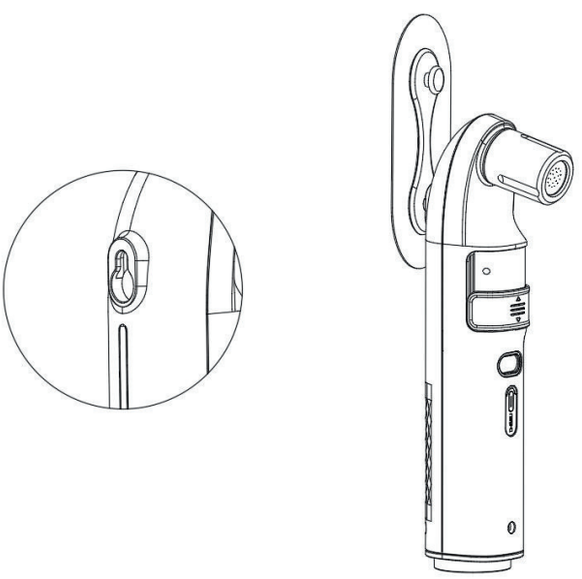

②

After use, the product can be placed on the holder of the tank (figure ①),
or hung on the wall with the adhesive hook (figure ②).

Specifications

Parameter	Value	Parameter	Value
Volt	3.7V DC	**Battery**	1600mAh
Current	≤1.5A	**Working Time**	60–100 minutes
Power	≤ 5.55W	**Input**	5V 1A
Product Size	96×70×211 mm	**Charging Time**	≈3 hours
Waterproof	IPX6	**Hose**	1.2 m
Water Flow	0.8–1.1 L/min	**Water Container**	5L

Safety Precautions

NOTICE

① If there is water inside the product, it can be placed flat or upright, the internal water can be drained through the bottom drainage hole.

② When the battery is low, charge it promptly. During charging the display counts upward and stays steadily lit when fully charged.

③ During extended operation, the main unit may generate heat due to normal energy conversion.

④ When using a water bottle to hold water, please use clean water only.

⑤ When connected to a mineral water bottle and left inverted and stationary, slight water seepage from the one-way valve drain hole is a normal occurrence.

⑥ For use with portable tanks or bottles only.

⑦ Do not connect the product to household plumbing, mains water supplies, or shower outlets unless installation is approved and performed by a licensed plumber.

⑧ Use only the supplied USB cable or a certified USB cable with a certified 5V USB power source.

⑨ The product is water-resistant to IPX6 standards. Do not immerse or submerge the product in water.

⑩ Keep out of reach of children. Contains small parts and a rechargeable battery.